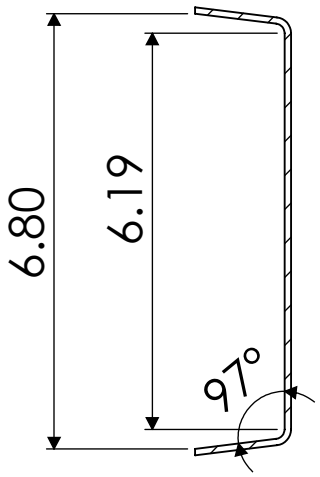

SECTION A-A
SCALE 1 : 3

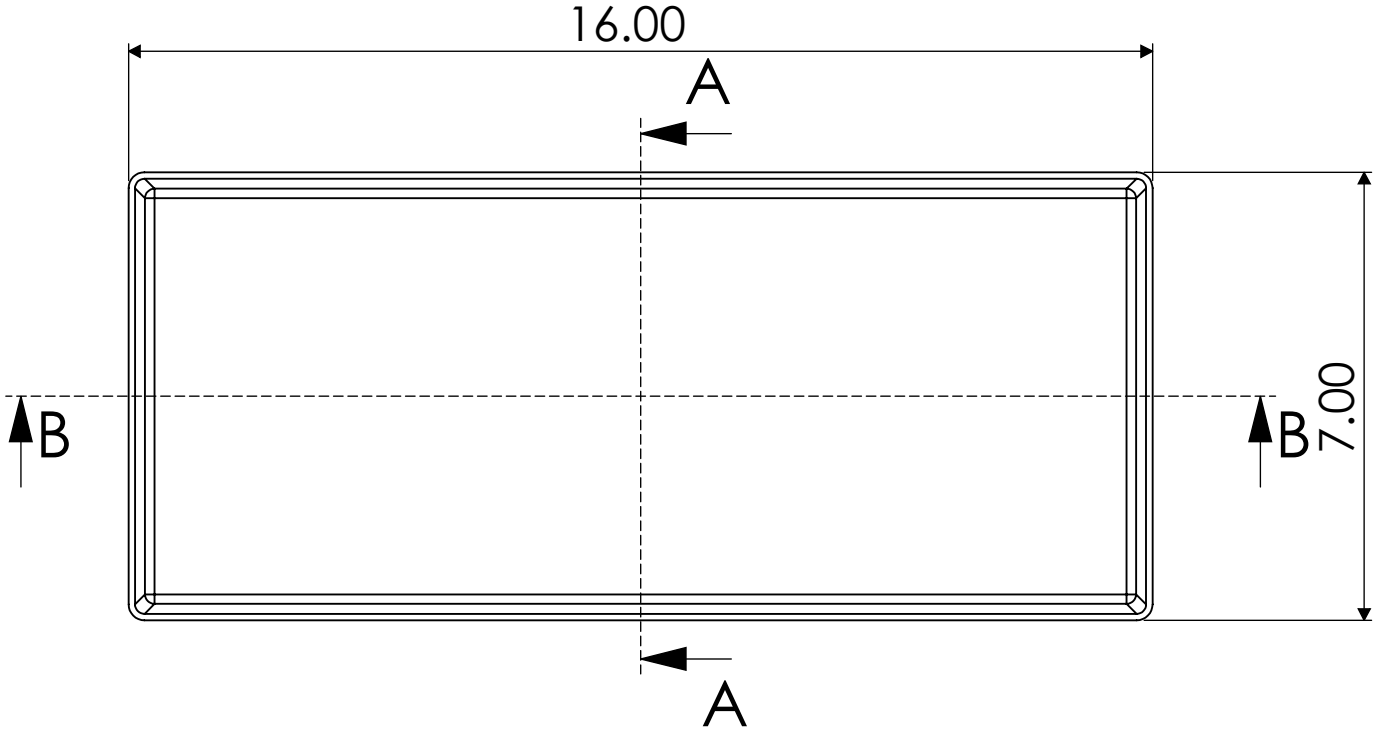

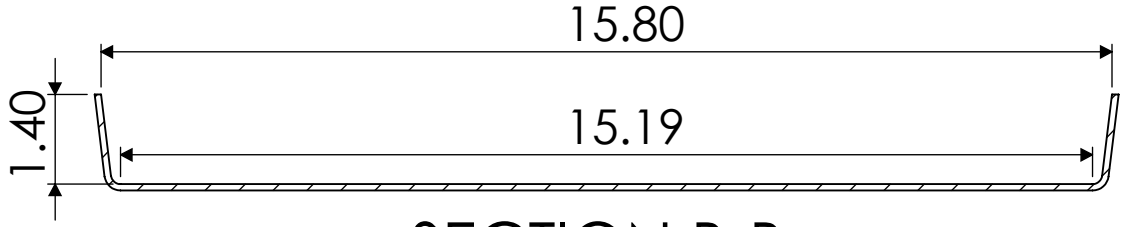

SECTION B-B
SCALE 1 : 3

Formed from .125" beggining gauge

Average wall thickness .07"

		UNLESS OTHERWISE SPECIFIED:		NAME	DATE
		DIMENSIONS ARE IN INCHES TOLERANCES: FRACTIONAL ± ANGULAR: MACH ± BEND ± TWO PLACE DECIMAL ±.03" THREE PLACE DECIMAL ±	DRAWN		
			CHECKED		
			ENG APPR.		
			MFG APPR.		
		INTERPRET GEOMETRIC TOLERANCING PER:	Q.A.		
		MATERIAL ABS	COMMENTS:		
NEXT ASSY	USED ON	FINISH Textured Outside			
APPLICATION		DO NOT SCALE DRAWING			

ShapeMaster, Inc.

TITLE:

SIZE	DWG. NO.	REV
A	DT_VII	
SCALE: 1:5	WEIGHT:	SHEET 1 OF 1

PROPRIETARY AND CONFIDENTIAL

THE INFORMATION CONTAINED IN THIS DRAWING IS THE SOLE PROPERTY OF ShapeMaster, Inc. ANY REPRODUCTION IN PART OR AS A WHOLE WITHOUT THE WRITTEN PERMISSION OF ShapeMaster, Inc. IS PROHIBITED.

5 4 3 2 1