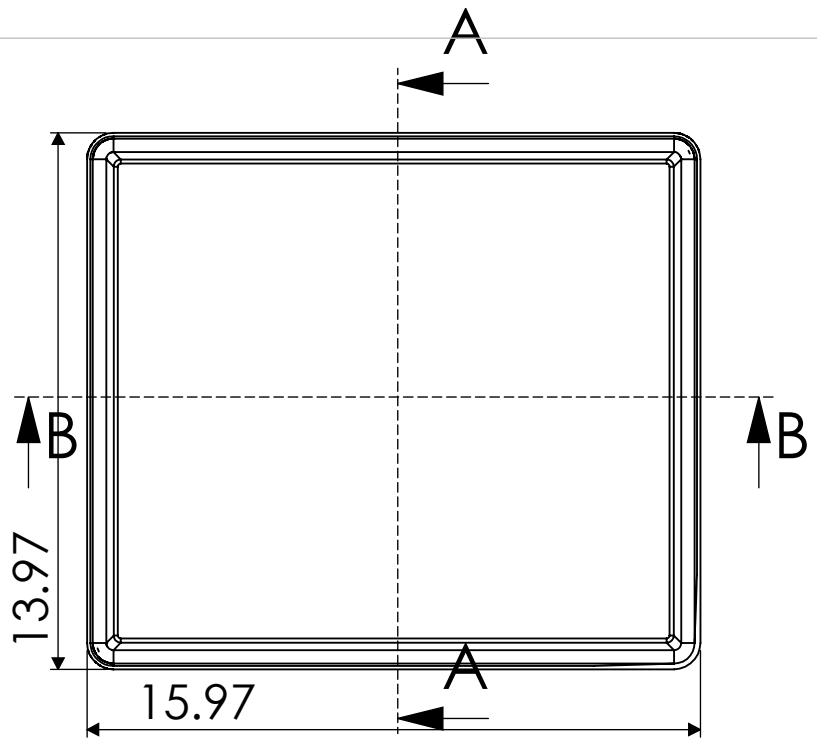

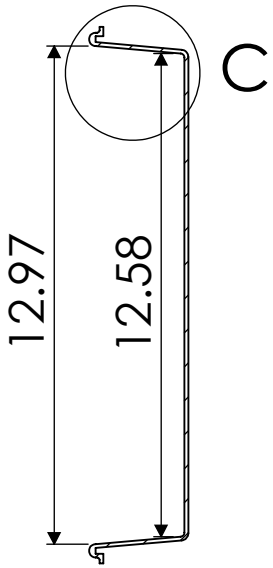

SECTION A-A

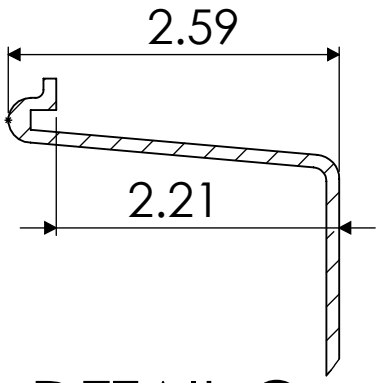

DETAIL C
SCALE 1 : 1.5

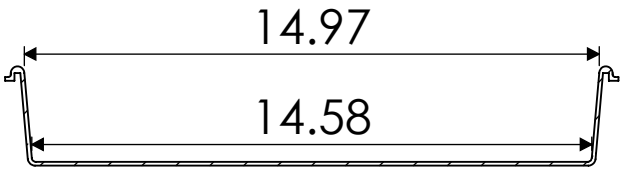

SECTION B-B

		UNLESS OTHERWISE SPECIFIED:		NAME	DATE
		DIMENSIONS ARE IN INCHES TOLERANCES: +/- .030 FRACTIONAL ± ANGULAR: MACH ± BEND ± TWO PLACE DECIMAL ± THREE PLACE DECIMAL ±	DRAWN		
			CHECKED		
			ENG APPR.		
			MFG APPR.		
		INTERPRET GEOMETRIC TOLERANCING PER:	Q.A.		
		MATERIAL	COMMENTS:		
NEXT ASSY	USED ON	FINISH			
APPLICATION		DO NOT SCALE DRAWING			

PROPRIETARY AND CONFIDENTIAL

THE INFORMATION CONTAINED IN THIS DRAWING IS THE SOLE PROPERTY OF ShapeMaster, Inc. ANY REPRODUCTION IN PART OR AS A WHOLE WITHOUT THE WRITTEN PERMISSION OF ShapeMaster, Inc. IS PROHIBITED.

ShapeMaster, Inc.

TITLE:

ShapeMaster Tray 1

2.5"Single Cavity Tray

SIZE	DWG. NO.	REV
A	SM_1	

SCALE: 1:5 | WEIGHT: | SHEET 1 OF 1

5 4 3 2 1