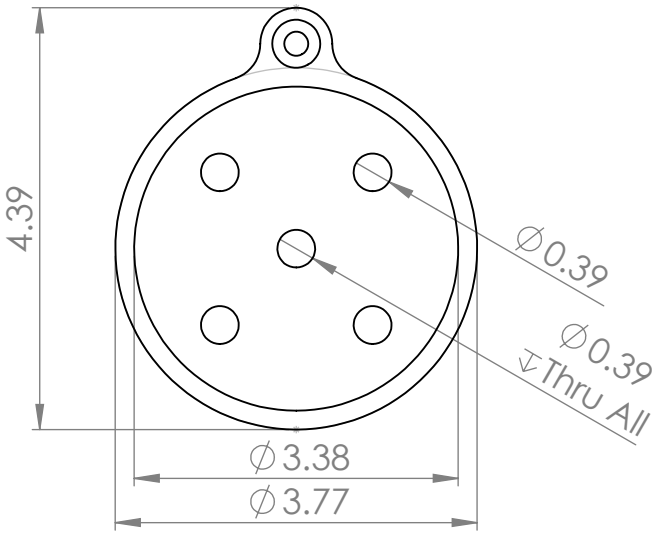

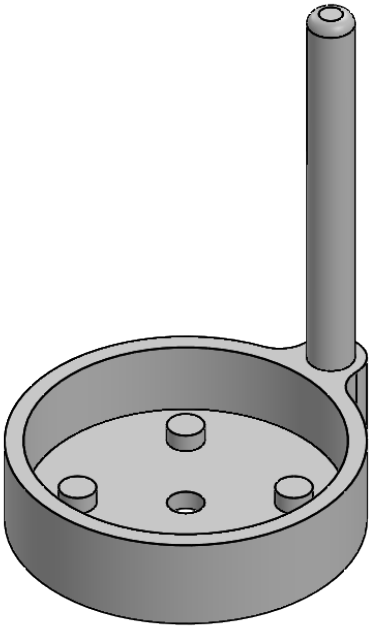

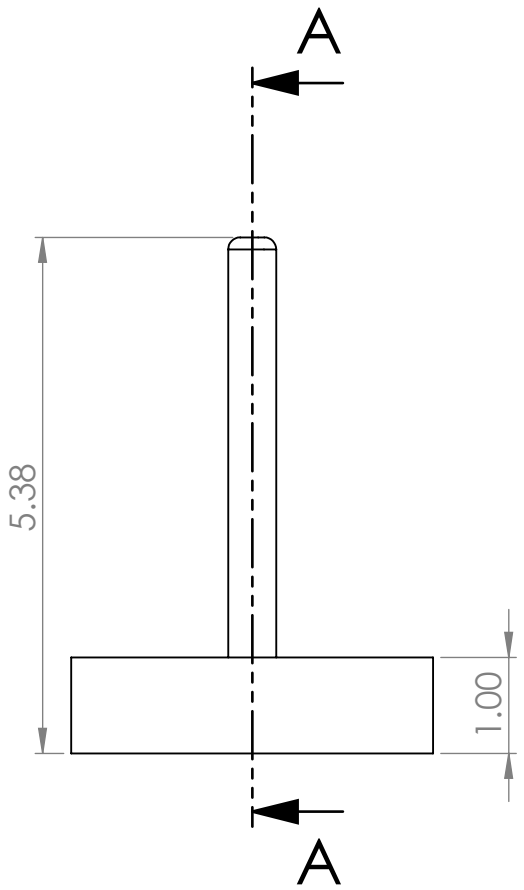

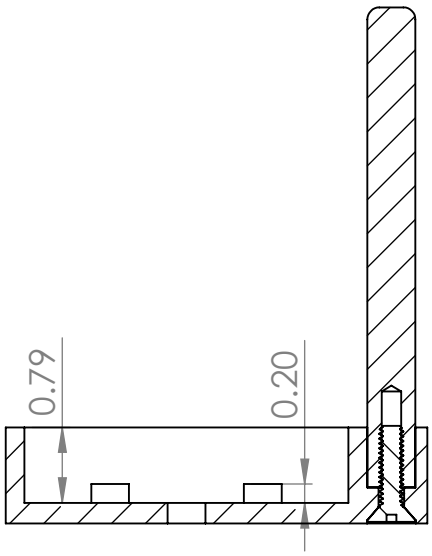

SECTION A-A

PROPRIETARY AND CONFIDENTIAL

THE INFORMATION CONTAINED IN THIS DRAWING IS THE SOLE PROPERTY OF SHAPEMASTER INC. ANY REPRODUCTION IN PART OR AS A WHOLE WITHOUT THE WRITTEN PERMISSION OF SHAPEMASTER INC. IS PROHIBITED.

NEXT ASSY	USED ON
APPLICATION	

DIMENSIONS ARE IN INCHES
TOLERANCES:
ANGULAR:MACH ±.
BEND ±.
TWO PLACE DECIMAL ±.03
THREE PLACE DECIMAL ±.010

MATERIAL White PTFE

FINISH

DO NOT SCALE DRAWING

	NAME	DATE
DRAWN	RJL	3/6/19
ENG APPR.		
MFG APPR.		
Q.A. APPR.		

Comments

ShapeMaster Inc.
P.O. Box 372
108 E. Main Street
Ogden,IL. 61859
(886) 670-2799

SIZE	PART NO.	REV.
A	SM3WD5	A

SCALE:1:2 WEIGHT: SHEET 1 OF 1